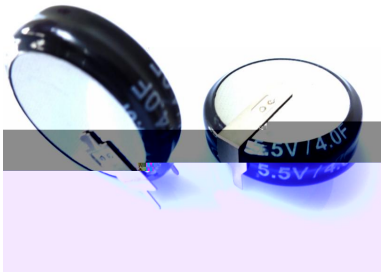

5V / 4.0F

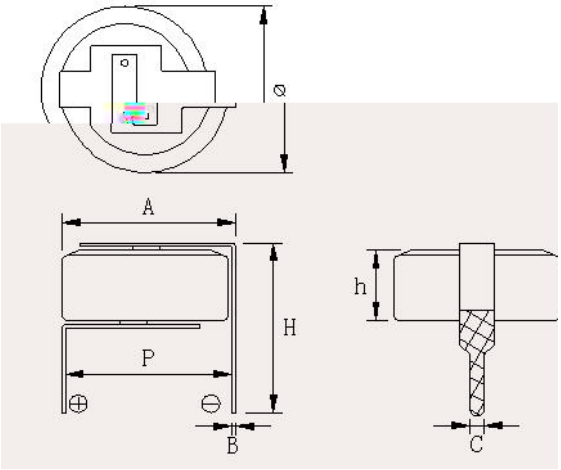
⌀
A
H
h
P
B
C

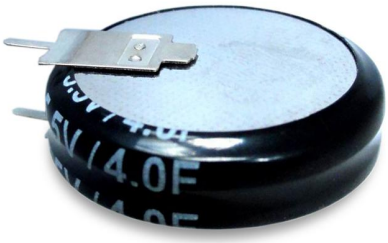
4.0F

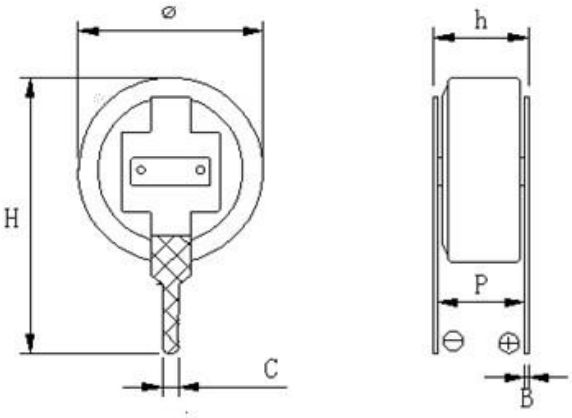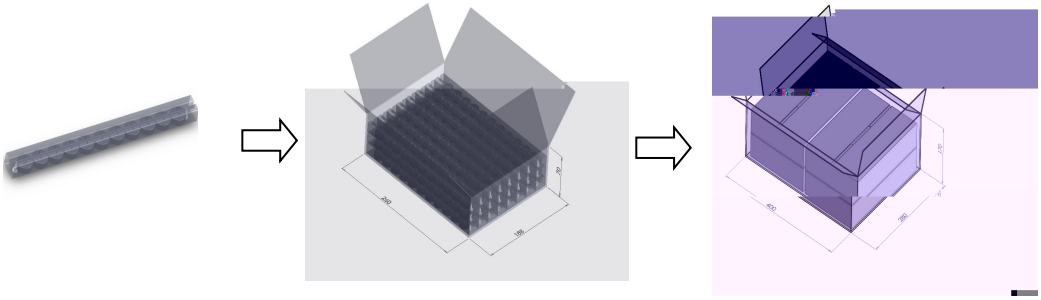
⌀
h
H
P
C
B